TAYLOR
METAL PRODUCTS

SmoothWall™, ShadowLine™ & Lifetime Soffit™ Installation Guide

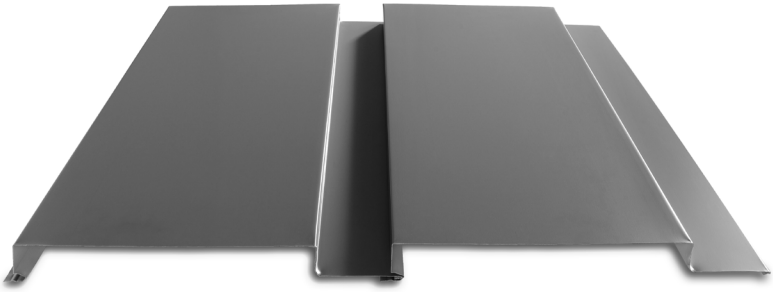

Table of Contents

- Panel Specifications 1-6
- Introduction 7
- Handling & Storage 8
- Taylor Delivery Fleet 9
- Delivery & Will Call/Loading 10
- Tools & Equipment 11
- Fasteners 12
- SmoothWall™ and ShadowLine™ Oil canning 13
- SmoothWall™ and ShadowLine™ Panel Installation 14
- Order Form 33
- Custom Trim 34

FLASHINGS

- Wall C-Flashing 15
- Base Flashing 16
- Outside Corner 17
- Inside Corner 18
- Z- Flashing 19
- Z-Backer 20
- Soffit Panel Installation 21
- Soffit C & Angle Flashings 22
- Fascia Board & H-Flashing 23
- Drip Flashings 24
- Standard Flashings 25-32

TAYLOR METAL PRODUCTS

SmoothWall™
Flush Seam Series
Wall and Soffit

ICC EVALUATION SERVICE® **ICC-ESR EVALUATION REPORT #5045 with CBC-CRC Supplement**

Now Available: STRIATIONS

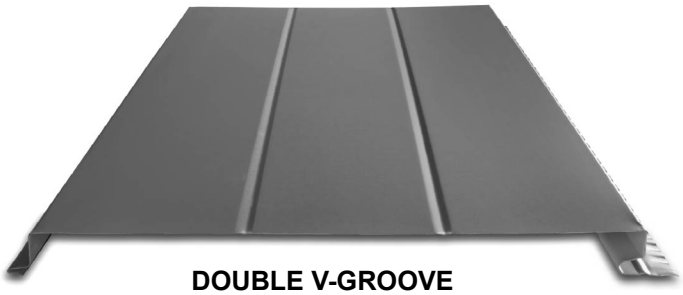

DOUBLE V-GROOVE
or Single V-Groove available

FLAT PAN

FLAT PAN PANELS

KEY FEATURES

- 12" coverage option
- 24 & 22 gauge Tru-gauge™
- .032 & .040 Aluminum
- 20 and 18 gauge, .050 and .063 Aluminum available *(Please inquire)*
- Custom Lengths 3' to 35' *(Inquire for longer or shorter lengths)*
- For panels over 14 ft. in length, please inquire with a TMP Representative. Consider thermal movement, points of attachment, and substrate. Longer panel lengths are more difficult to install as they can change shape, cause distortion (“oil canning”), and are vulnerable to “folding” or other damage.
- 2' Shortcut capability *(Fee applicable)*
- Concealed Fasteners: fasteners cannot leak
- Versatile in wall and soffit applications
- Panels being installed on open frame building, inquire
- Panel options: Vented, Striations, Single V-Groove, Double V-Groove, and Flat Pan (*only available in 24 & 22 gauge, and .032 & .040 Aluminum*)
- “Oil canning” is an inherent characteristic of roof and wall products, and not a defect, which is not a cause for panel rejection

TESTING

- ICC EVALUATION SERVICE® ICC-ESR #5045 with CBC-CRC Supplement
- ASTM E1592 - Structural uniform static air pressure
- ASTM E1680 - Air Infiltration Roofing
- ASTM E283 - Air Infiltration Siding
- ASTM E1646 - Water Infiltration Roofing
- ASTM E331 - Water Infiltration Siding

SmoothWall™ installation is recommended over solid sheathing with z-backer during installation to mitigate visual canning effects or "oil canning".

TAYLOR METAL PRODUCTS

MATERIAL SPECIFICATIONS

- 24 Tru-Gauge™ Kynar 500® Painted Steel
- ▲ 22 Tru-Gauge™ Kynar 500® Painted Steel
- 24 Tru-Gauge™ G-90 Galvanized or AZ-50
- 24 and 22 Tru-Gauge™ bare Zincalume® Plus AZ-55 *(No finish warranty – 25 yr. perforation warranty)*
- G-90 Galvanized or AZ-50
- 24 Tru-Gauge™ Bonderized
- 22 gauge Rusteel Plus™ (A606)
- 16 OZ & 20 OZ Real Copper (please inquire)
- Kynar 500® and substrate testing data available (See website)
- PVDF is a fluoropolymer that is manufactured under the trademarked names Kynar 500® and Duranar® (PPG). Paint finishes containing a minimum 70% PVDF resin meet the high-performance weathering criteria established by the American Architectural Manufacturing Association and are allowed to carry the Kynar500® trademarked name. Zincalume & Zincalume® Plus are registered trademarks of Bluescope Ltd. Galvalume® is a registered trademark of BIEC International, Inc. Vintage® is a registered trademark of Steelscape, Inc. Kynar® and Kynar 500® is a registered trademarks of Arkema, Inc.

FINISHES

- 21 Standard Colors, 5 Metallic Colors and 4 Specialized Colors
- Kynar 500® Paint System - the ultimate in exterior durability and color retention
- "Cool" color pigments are specially designed to reflect infrared light, reducing heat gain to dwelling, and conform with ENERGY STAR® criteria
- Superior quality, two coat, 70% resin finish, applied at a 1 mil. thickness
- 40 year residential paint warranty
- 20 and 30 year commercial paint warranty: Contact TMP for warranty specifications
- "Oil Canning" is an inherent characteristic of roof and wall products, and not a defect, which is not a cause for panel rejection

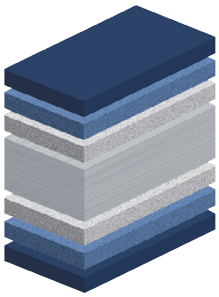

STANDARD COOL KYNAR 500® COLORS

▲22 Tru-Gauge™
✦.032 Aluminum

- Glacier White SRI-85 ▲✦
- Sierra Tan SRI-60
- Parchment SRI-58 ▲
- Sterling Grey SRI-44 ▲✦
- Zinc Grey SRI-39 ▲✦
- Charcoal Grey SRI-25 ▲✦
- Saddle Tan SRI-37 ▲
- Medium Bronze SRI-36 ▲✦
- Musket SRI-31 ▲
- Dark Bronze SRI-22 ▲✦
- Tahoe Blue SRI-31
- Pacific Blue SRI-26
- Hemlock Green SRI-36
- Forest Green SRI-24 ▲
- Pine Green SRI-25
- Terra Cotta SRI-43
- Tile Red SRI-35
- Colonial Red SRI-37 ▲
- Retro Red SRI-42
- Graphite Black SRI-26 (formerly: Black) ▲✦
- Matte Black SRI-23 ▲✦

PREMIUM METALLIC COOL KYNAR® COLORS

- Metallic Silver SRI-60 ▲✦
- Champagne SRI-48
- Antique Patina SRI-40
- Copper Penny SRI-50
- Weathered Zinc SRI-39 ▲✦

SPECIALIZED MATERIAL

- 16 oz. and 20 oz. Copper *please inquire* Pure copper has no warranty
- Zincalume® Plus No finish warranty – 25 yr. perforation warranty ▲
- Vintage® SRI-22 Vintage® has a color range that can vary from batch-to-batch. See TMP website for more info
- Rusteel Plus™ (A606) Rusteel Plus™ has no metallic coating, is unpainted and has no warranty ▲

These printed chips provide a close representation of the colors.

Metal samples are available upon request. Coatings are low gloss 10-15% sheen.

*SRI = Solar Reflective Index. SRI values listed above are in accordance with ASTM E 1980 and are based on actual testing.***Oil canning is not a cause for material rejection****

steelscape PPG ENERGY STAR CRRC MEMBER

10-26

ShadowLine™
Flush Seam Series
Wall and Soffit

TAYLOR METAL PRODUCTS

ICC EVALUATION SERVICE® **ICC-ER EVALUATION REPORT #5045 with CBC-CRC Supplement**

DOUBLE V-GROOVE
or Single V-Groove available

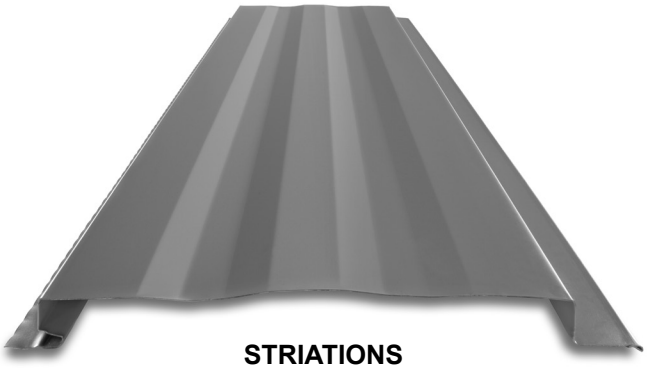

STRIATIONS

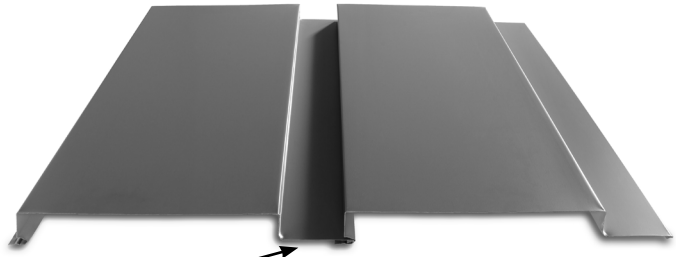

(2" REVEAL SHOWN)

2 FLAT PAN PANELS
REVEAL AVAILABLE: 1/2" to 2" in 1/2" INCREMENTS

ShadowLine™ will give your commercial or residential project a unique appearance. The panel reveal displays a shadowing effect that changes throughout the day, giving depth to your building. These panels are a perfect fit to be used on walls, soffits and fascia. With the 4 different panel styles available, your designs will come alive.

KEY FEATURES

- 11" to 15" coverage options
- 24 & 22 gauge Tru-Gauge™
- .032 & .040 Aluminum
- Custom Lengths 3' to 35'
  (Inquire on longer or shorter lengths)
- For panels over 14 ft. in length, please inquire with a TMP Representative. Consider thermal movement, points of attachment, and substrate. Longer panel lengths are more difficult to install as they can change shape, cause distortion (“oil canning”), and are vulnerable to “folding” or other damage.
- 2' Shortcut capability *(Fee applicable)*
- Concealed Fasteners: fasteners cannot leak
- Versatile in wall and soffit applications
- Panels being installed on open frame building, inquire
- Panel options: Vented, Striations, Single V-Groove, Double V-Groove, and Flat Pan
- ShadowLine™ can be perforated for soffit applications
- “Oil canning” is an inherent characteristic of roof and wall products, and not a defect, which is not a cause for panel rejection

TESTING

- ICC EVALUATION SERVICE® ICC-ESR #5045 with CBC-CRC Supplement
- ASTM E1592 - Structural uniform static air pressure
- ASTM E1680 Air Infiltration Roofing
- ASTM E283 Air Infiltration Siding
- ASTM E1646 Water Infiltration Roofing
- ASTM E331 Water Infiltration Siding

TAYLOR METAL PRODUCTS

MATERIAL SPECIFICATIONS

- 24 Tru-Gauge™ Kynar 500® Painted Steel
- ▲22 Tru-Gauge™ Kynar 500® Painted Steel
- ✦ .032" Kynar 500® Painted Aluminum
- 24 Tru-Gauge™ G-90 Galvanized or Zincalume® AZ-50
- 24 and 22 Tru-Gauge™ bare Zincalume® Plus AZ-55 *(No finish warranty – 25 yr. perforation warranty)*
- G-90 Galvanized or Zincalume® AZ-50
- .040" Kynar 500® Painted Aluminum (please inquire)
- 24 Tru-Gauge™ Bonderized
- 22 gauge Rusteel Plus™ (A606)
- Custom 20 & 18 Tru-Gauge™ and .050" and .063" Aluminum (please inquire)
- 16 OZ & 20 OZ Real Copper
- Kynar 500® and substrate testing data available (See website)

PVDF is a fluoropolymer that is manufactured under the trademarked names Kynar 500® and Duranar® (PPG). Paint finishes containing a minimum 70% PVDF resin meet the high-performance weathering criteria established by the American Architectural Manufacturing Association and are allowed to carry the Kynar500® trademarked name. Zincalume & Zincalume® Plus are registered trademarks of Bluescope Ltd. Galvalume® is a registered trademark of BIEC International, Inc. Vintage® is a registered trademark of Steelscape, Inc. Kynar® and Kynar 500® is a registered trademarks of Arkema, Inc.

FINISHES

- 21 Standard Colors, 5 Metallic Colors and 4 Specialized Colors
- Kynar 500® Paint System - the ultimate in exterior durability and color retention
- "Cool" color pigments are specially designed to reflect infrared light, reducing heat gain to dwelling, and conform with ENERGY STAR® criteria
- Superior quality, two coat, 70% resin finish, applied at a 1 mil. thickness
- 40 year residential paint warranty
- 20 and 30 year commercial paint warranty: Contact TMP for warranty specifications
- "Oil Canning" is an inherent characteristic of roof and wall products, and not a defect, which is not a cause for panel rejection

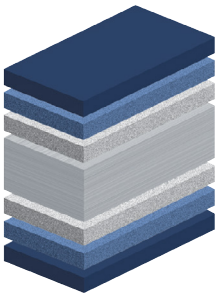

STANDARD COOL KYNAR 500® COLORS

▲22 Tru-Gauge™
✦.032 Aluminum

Glacier White SRI-85 ▲✦
Sierra Tan SRI-60
Parchment SRI-58 ▲
Sterling Grey SRI-44 ▲✦
Zinc Grey SRI-39 ▲✦
Charcoal Grey SRI-25 ▲✦
Saddle Tan SRI-37
Medium Bronze SRI-36 ▲✦
Musket SRI-31 ▲
Dark Bronze SRI-22 ▲✦

Tahoe Blue SRI-31
Pacific Blue SRI-26 1, 2
Hemlock Green SRI-36
Forest Green SRI-24 ▲
Pine Green SRI-25
Terra Cotta SRI-43
Tile Red SRI-35
Colonial Red SRI-37 ▲
Retro Red SRI-42
Graphite Black SRI-26 (formerly: Black) ▲✦
Matte Black SRI-23 ▲✦

PREMIUM METALLIC COOL KYNAR® COLORS

Metallic Silver SRI-60 ▲✦
Champagne SRI-48
Antique Patina SRI-40
Copper Penny SRI-50
Weathered Zinc SRI-39 ▲✦

SPECIALIZED MATERIAL

16 oz. and 20 oz. Copper
please inquire Pure copper has no warranty

Zincalume® Plus ▲
No finish warranty – 25 yr. perforation warranty

Vintage® SRI-22
Vintage® has a color range that can vary from batch-to-batch. See TMP website for more info

Rusteel Plus™ (A606) ▲
Rusteel Plus™ has no metallic coating, is unpainted and has no warranty

These printed chips provide a close representation of the colors.

Metal samples are available upon request. Coatings are low gloss 10-15% sheen.

*SRI = Solar Reflective Index. SRI values listed above are in accordance with ASTM E 1980 and are based on actual testing.***Oil canning is not a cause for material rejection****

steelscape PPG ENERGY STAR CRRC MEMBER

10-26

TAYLOR METAL PRODUCTS

Lifetime Soffit™
Flush Seam Series Wall and Soffit

PANEL PROFILES

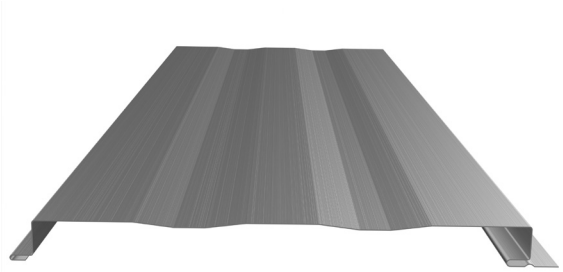

Now Available: STRIATIONS
Striations offer the best solution to help minimize oil canning

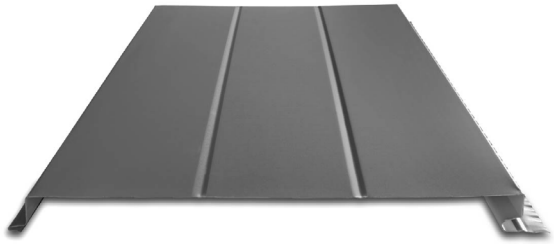

DOUBLE V-GROOVE (shown)
or Single V-Groove available

FLAT PAN

VENTED PANELS

KEY FEATURES

- 12" coverage option
- 24 & 22 gauge Tru-gauge™
- .032 & .040 Aluminum
- Substrate: ASTM A653 / A792
- Custom Lengths 3' to 35'
  (Inquire for longer or shorter lengths)
- For panels over 14 ft. in length, please inquire with a TMP Representative. Consider thermal movement, points of attachment, and substrate. Longer panel lengths are more difficult to install as they can change shape, cause distortion (“oil canning”), and are vulnerable to “folding” or other damage.
- 2' Shortcut capability *(Fee applicable)*
- Concealed Fasteners: fasteners cannot leak
- 6.16 sq. inch (4.2%) free air flow per lineal foot of perforated panel
- Versatile in wall and soffit applications
- Panels being installed on open frame building, inquire
- Panel options: Vented, Striations, Single V-Groove, Double V-Groove, and Flat Pan
- “Oil canning” is an inherent characteristic of roof and wall products, and not a defect, which is not a cause for panel rejection

TESTING

- ASTM E1592 - Structural uniform static air pressure
- ASTM E283 - Air Infiltration (Wall)
- ASTM E331 - Water Infiltration (Wall)
- ASTM E2886 - Ember Penetration (Vented Soffit)

Lifetime Soffit™ will give your commercial or residential projects a clean monolithic appearance. These panels are a perfect fit to be used on walls, soffits and fascia. With the different panel styles available, your designs will come alive.

TAYLOR
METAL PRODUCTS

MATERIAL SPECIFICATIONS

- 24 Tru-Gauge™ Kynar 500® Painted Steel
- ▲ 22 Tru-Gauge™ Kynar 500® Painted Steel
- 24 Tru-Gauge™ G-90 Galvanized or AZ-50
- 24 and 22 Tru-Gauge™ bare Zincalume® Plus AZ-55 *(No finish warranty – 25 yr. perforation warranty)*
- G-90 Galvanized or AZ-50
- ✦ .032" & .040" Kynar 500® Painted Aluminum (please inquire)
- 24 Tru-Gauge™ Bonderized
- 22 gauge Rusteel Plus™ (A606)
- 16 OZ & 20 OZ Real Copper (please inquire)
- Kynar 500® and substrate testing data available (See website)

- PVDF is a fluoropolymer that is manufactured under the trademarked names Kynar 500® and Duranar®(PPG). Paint finishes containing a minimum 70% PVDF resin meet the high-performance weathering criteria established by the American Architectural Manufacturing Association and are allowed to carry the Kynar500® trademarked name. Zincalume & Zincalume® Plus are registered trademarks of Bluescope Ltd. Galvalume® is a registered trademark of BIEC International, Inc. Vintage® is a registered trademark of Steelscape, Inc. Kynar® and Kynar 500® is a registered trademarks of Arkema, Inc.

FINISHES

- 21 Standard Colors, 5 Metallic Colors and 4 Specialized Colors
- Kynar 500® Paint System - the ultimate in exterior durability and color retention
- "Cool" color pigments are specially designed to reflect infrared light, reducing heat gain to dwelling, and conform with ENERGY STAR® criteria
- Superior quality, two coat, 70% resin finish, applied at a 1 mil. thickness
- 40 year residential paint warranty
- 20 and 30 year commercial paint warranty: Contact TMP for warranty specifications
- "Oil Canning" is an inherent characteristic of roof and wall products, and not a defect, which is not a cause for panel rejection

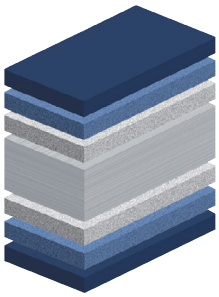

STANDARD COOL KYNAR 500® COLORS

▲22 Tru-Gauge™
✦.032 Aluminum

- Glacier White SRI-85 ▲✦
- Sierra Tan SRI-60
- Parchment SRI-58 ▲
- Sterling Grey SRI-44 ▲✦
- Zinc Grey SRI-39 ▲✦
- Charcoal Grey SRI-25 ▲✦
- Saddle Tan SRI-37
- Medium Bronze SRI-36 ▲✦
- Musket SRI-31 ▲
- Dark Bronze SRI-22 ▲✦
- Tahoe Blue SRI-31
- Pacific Blue SRI-26
- Hemlock Green SRI-36
- Forest Green SRI-24 ▲
- Pine Green SRI-25
- Terra Cotta SRI-43
- Tile Red SRI-35
- Colonial Red SRI-37 ▲
- Retro Red SRI-42
- Graphite Black SRI-26 (formerly: Black) ▲✦
- Matte Black SRI-23 ▲✦

PREMIUM METALLIC COOL KYNAR® COLORS

- Metallic Silver SRI-60 ▲✦
- Champagne SRI-48
- Antique Patina SRI-40
- Copper Penny SRI-50
- Weathered Zinc SRI-39 ▲✦

SPECIALIZED MATERIAL

- 16 oz. and 20 oz. Copper *please inquire* Pure copper has no warranty
- Zincalume® Plus No finish warranty – 25 yr. perforation warranty ▲
- Vintage® SRI-22 Vintage® has a color range that can vary from batch-to-batch. See TMP website for more info
- Rusteel Plus™ (A606) Rusteel Plus™ has no metallic coating, is unpainted and has no warranty ▲

These printed chips provide a close representation of the colors.

Metal samples are available upon request. Coatings are low gloss 10-15% sheen.

*SRI = Solar Reflective Index. SRI values listed above are in accordance with ASTM E 1980 and are based on actual testing.***Oil canning is not a cause for material rejection****

steelscape

ENERGY STAR

CRRC MEMBER

Introduction

Taylor Metal Products, **SmoothWall™**, **Lifetime Soffit™** & **ShadowLine™** panels are designed for use on residential and commercial structures.

SmoothWall™, **Lifetime Soffit™** & **ShadowLine™** panels are available in standard lengths between 4 feet and 25 feet in 1/4" increments. For best results, TMP recommends panel lengths of 12' or less. For taller wall heights, use a Z-Backer (ZB - page 19) to break up the distance into two panels. Panels shorter than 4 feet are available, however, they are subject to a per panel handling charge. Please see current price list.

The **SmoothWall™** & **ShadowLine™** panels can be used on vertical wall or mansard applications to provide an appealing, long lasting alternative to common siding products or as an accent area to add color or tecture to any building. SmoothWall™ panels are smooth faced and available with striations or an optional center V-Groove (6" reveal) or two V-Grooves (4" reveal).

SmoothWall™ panels are also available with a polystyrene backer. The primary function of the backer is to provide support for the panel to minimize denting and buckling due to impact. When using the polystyrene backer it is advisable to use solid sheathing or space sheathing set 4 to 6 inches apart to gain the greatest benefit of the polystyrene. The entire panel is not filled with polystyrene, therefore it is not intended to provide insulation or be used for sound absorbtion, although some insulation value and sound absorbtion can be gained from the polystyrene.

The **Lifetime Soffit™** provides an attractive alternative to plywood or open soffits and offers ventilation when incorporating perforated soffit panels into the system. Lifetime Soffit™ panels are available in smooth (solid) or perforated, with an optional center v-groove.

Please contact Taylor Metal Products for use of custom flashing details as they pertain to specific conditions or to discuss a specific project.

Conformity to local building codes, details for specific applications, and use of safety and health procedures is the sole responsibility of the installer.

These installation instructions are intended to offer suggested application procedures for common building construction. No attempt is made to provide installation details for every application or possible use. Taylor Metal Products, assumes no liability for the improper installation of the panel nor for any personal injury or property damage that may occur with the product's use.

***Oil Canning** - All light gauge metals can display waviness often referred to as "oil canning." This is caused by steel mill tolerances, substrate variation and relative reflectivity. "Oil canning" is an inherent characteristic of steel products, not a defect, and is not a cause for material rejection.*

Handling and Storage

Handling

Handle materials with care when off loading or moving materials to avoid damage to panels or flashings. Long panels may require two or more pick-up points, properly spaced to avoid damaging panels. Plan ahead. Contact Taylor Metal Products for recommendations on handling/hoisting long panels.

Wear clean cotton gloves when handling copper or unpainted Zincalume® to avoid leaving fingerprints and smudges. While finger-prints or smudges will not harm the material, they will temporarily leave markings on the material until the material weathers.

Wear clean, soft-soled shoes when walking on roofing panels to avoid damage to the painted finish. Take care that sand, gravel, dirt etc. sticking to your shoes is not carried onto the roof, scratching or otherwise damaging the finish on the roofing material.

Walking on asphalt impregnated felt paper, especially on a hot day, can cause the asphalt to stick to your shoes and be tracked onto the roofing material. Do not walk on major ribs of panels. Do not walk on panels that have not been completely installed.

Take care when painting to avoid getting over spray on the roofing material. Remember that wind can carry paint particles some distance. Over spray can cause the finish of the roofing material to look dull and may void your warranty.

Do not allow panels to contact preservative-treated lumber. Water and ice shield material is effective in preventing a corrosive reaction between steel products and pressure-treated lumber.

Storage

Store the panels, flashings, and accessories in a dry, well ventilated area, on level ground. Slightly elevate one end of bundles to allow drainage of wet materials. Support panels with blocks thoughout escalation in elevation to prevent permanent deformation. If covering, allow ventilation around the panels.

Protect panels against standing water and condensation between adjacent surfaces. If panels become wet, immediately separate sheets, wipe dry with clean cloth, and keep sheets separate for air-drying.

Painted metal roofing panels will have a clear plastic film applied to the lower rib of the panel to protect the seam during transportation and handling. Flashing and flat sheet may have a plastic film for protection. Remove this film prior to installation of the panels.

Products with film should not be stored in direct sunlight or under other UV source, and should not be left in extreme heat or cold for long periods.

Secure materials on the ground or roof to prevent winds from moving the materials, especially when leaving the site. Wind-blown materials may cause damage to the material, property or persons. Avoid installing panels in windy conditions.

Safety considerations are the responsibility of the installer and their crew. Be sure to **use common sense** and accepted industry standard safety practices when installing roofing materials. Always use proper safety equipment and attire to minimize risk of cuts or other injuries.

Delivery Fleet

Delivery Fleet

Taylor Metal Products prides itself with quick lead times delivered with our fleet of semi trucks. Our fleet of trucks are owned and operated by TMP. All of our drivers are Taylor Metal Products employees, so when your truck rolls in to deliver, you are dealing with Taylor Metal Products.

Expect consistant and exceptional service with short lead times. The inhouse fleet allows for efficient and cost-effective delivery.

Mounted on the rear of our semitrailer, the trailer-mounted "piggy-back" forklift will accompany you right to your place of use, opening up unprecedented possibilities in terms of transportation. It can travel sideways, carrying panels up to 40' long, allowing delivery in locations that would typically be considered impossible to reach.

Save time and effort while avoiding potential loading and transport issues; have experienced TMP personnel deliver and unload your order.

Delivery & Will Call/Loading

Delivery

We will make every attempt to deliver material to the desired location. We may be unable to gain access on tight corners or steep terrain. If the site is deemed inaccessible by our driver, the customer may choose an alternate delivery site within a reasonable proximity. If we are unable to make the alternate delivery, additional charges may be assessed.

The customer is responsible for:

- Determining adequate access for delivery ahead of time.
- Meeting the delivery at the agreed upon time.
- Providing adequate resources (1-4 people as needed) for off loading materials. ***A charge of $100 per hour may be added for deliveries that go beyond their allotted time.***
- Checking the shipment at the time of delivery.
- Verifying material quantities against the shipping/packing list.
- Noting any damage or discrepancies upon the paper work at the time of delivery and notifying Taylor Metal Products within 48 hours of delivery.

Delivery times are usually scheduled one day in advance. Taylor Metal Products will make every effort to make the delivery at the scheduled time. Please be aware that there may be conditions beyond our control such as traffic, mechanical failures, road closures, etc. which may affect our schedule. If a delay is expected, you will be notified in advance of delivery.

Will Call & Loading

Flatbed trailers and trucks are best suited to transport metal roofing materials. These can be loaded from the side with a forklift and tied down in a safe and secure manner.

We are not able to load materials onto vehicles and/or trailers which are not suitable or may be hazardous to load. Please be aware that if we find a vehicle to be inappropriate, we reserve the right to refuse to load your order.

> Unacceptable examples include: boat trailers, vans, buses, motor homes, campers and box trailers. Pickup racks which do not have sufficient supports for the weight or are not long enough to support bundles are also unacceptable.

Taylor Metal Products is not responsible to tie down loads nor do we provide any tie down materials. Please bring tie downs to secure your load (string or twine are **not** acceptable for this purpose).

Consider having your order delivered on one of our trucks with a piggy back forklift.

Tools

The following tools/safety equipment may be used for proper installation:

- Screw Gun: Clutch type, variable torque, cordless screw guns will give the best results.
  - Extra batteries
  - Bit holder - magnetic
  - #2 square drive bits or philips drive bits (for panel screws)
  - 1/4" Hex head - magnetic - bit driver (for woodfast flashing screws)
  - 1/8" drill bit (for rivets & pre-drilling fastener holes)
  - Belt & holster (keeps all the above tools safely on your hip)

Cutting Tools:

- Cutters/Offset (curved jaw) left & right (for precision cutting, long cuts
- Snips (straight jaw) left & right (for short cuts & circular cuts)
- Electric Shears (aids in long panel rips)

CAUTION: POWER SAWS MAY CAUSE PANEL DAMAGE!

TMP recommends cutting panels and flashings with tin snips or shears.

We do NOT recommend the use of saw blades or abrasive wheels - use may void warranties and reduce longevity, especially in marine environments.

Other Tools:

- DeBurring Tool
- Hole Punch (for pre-punching holes in metal)
- Rubber Mallet - SoftType (for adjusting panels & flashings)
- Quick Square, Framing Square & Bevel Square (aids in squaring flashings & panels)
- Duck Bill Vise Grips/Pliers (for various bending)
- Upender Tools (used for panel-prep, available at TMP)
- Tape Measure
- Rivet Tool (for riveting flashings)
- Marking pen or grease pencil
- Chalk Line (for marking long panel rips and to align panels)
- Protective gloves to protect hands
- Cotton gloves for working with copper (to protect against fingerprints on finish)
- Ear plugs
- Safety harness kit

WARNING : Filings, debris and metal chips must be wiped off panels each day to avoid corroding the panels and causing rust specks or stains. Water can cause non-finished metal shaving to bind to panels after rust develops damaging panels. Failure to properly install panels and remove debris may void warranties.

Fasteners

FASTENER	DESCRIPTION	USE
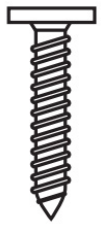	**Pancake Head, Sharp point** #10 x 1" #2 Phillips Head	The pancake head screw is recommended for panel attachment and is a concealed fastener.
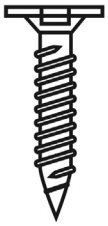	**Waferhead Srew, Sharp point** #9-16 x 1" #2 Phillips/Square Drive #9-16 x 1-1/2" #2 Square Drive	Waferhead screws are used for attaching the panels to a wood deck or substrate.They are concealed fasteners and made of carbon steel coated with Zinc and an Oxyseal/Xylon Coating for long life.
	Lath Head Screw, Sharp Point #8 x 9/16"	While generally not recommended for most applications, this concealed fastener is useful for areas where a longer fastener will penetrate the substrate and exhibit an objectionable appearance, such as exposed overhangs. The pull out rating for this fastener is less than the waferhead, so these fasteners need to be placed more often.
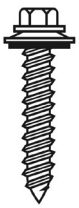	**Woodfast Screw, Sharp Point** #9-16 x l"1/4" Hex Drive- Color Match #9-16 x 1/2"1/4"	Woodfast screws are recommended for attaching metal to wood in some cases metal to metal. They are exposed fasteners.
	Stitch Screw, Sharp Point #12 x ¾" ¼" Hex Drive-Color Match	Stitch Screws are used to attach metal to metal such as lap joints in flashing. They can be used interchangeably with rivets.
	Rivets #43 (1/8" x 1/8") Stainless Steel rivet Color Matched or non-painted.	Rivets are used to attach metal to metal such as lap joints in flashing.

Oil Canning

When installing SmoothWall panels, it is crucial to take certain precautions to minimize the occurrence of oil canning. It is important to note that oil canning is a natural characteristic of metal panels and should not be considered a reason for rejection. One tried and true way to limit oil canning with SmoothWall panel is adding a metal Z (or backer rod) behind that panel that is fabricated slightly larger than the panel depth. When the Z is placed in the middle of the panel it creates a consistent convex bow to the panel that help relieve stress on the panel and limits oil canning.

Substrate must be true and plumb.
Whether the panels are being installed on a plywood substrate or metal framing (Zee and Hat), it is essential to ensure that they are placed on a flat and plumb surface. An effective way to achieve this is by utilizing lasers and string lines in conjunction, which will reveal any substrate variations. As needed, shims can then be added to maintain the panels flatness.

Fastening
When it comes to fastening, it is essential to avoid overtightening. Excessive tightening can worsen oil canning and result in panel bulging. To address this, it is crucial to select the appropriate fastener type. For SmoothWall panels, pancake head screws should be used, as opposed to bugle head screws. Bugle head screws can cause dimpling at the screw flange, which will then telegraph across the entire panel, exacerbating oil canning issues. Pancake head screws, on the other hand, sit flat against the metal flange, providing a more even distribution of pressure. However, even with pancake head screws, it is important not to over-tighten them.

If extreme expansion and contraction is an issue, the installer may need to compensate for this by drilling pilot holes at each fastener location. Pilot holes should be twice the size of the fastener being used.

Additionally, fasteners must be installed straight, as angled installation can create unnecessary pressure on the panels and lead to oil canning and bulging.

Installation Direction.
In terms of installation direction, TMP recommends installing SmoothWall panels from top to bottom. Installing from the bottom up can result in the female leg of the seam holding water, which can lead to premature failure. By installing from top to bottom, the panels can rest on the fastener below, reducing the likely hood of oil canning.

Wall Panel Installation

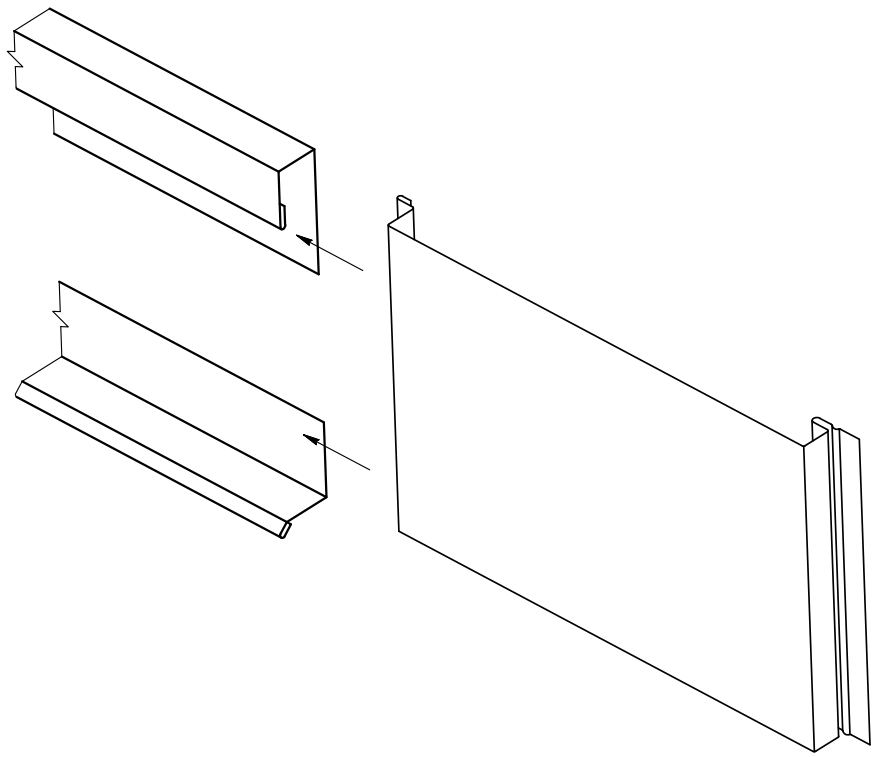

SmoothWall™/ ShadowLine™ Panel Installation

SmoothWall™/ ShadowLine™ panels are attached to the wall by fastening the wide flange of the panel to the substructure and can be attached to solid or space sheathing. A vapor barrier, such as 30lb felt paper, should be used over the sheathing. Fasten the panels to the sheathing through the screw flange.

Flashing details may vary with the application. It is most common to use a C-flashing at the top of the panel and a drip or sill type flashing at the bottom of the panel. C-flashing is typically used around the sides and bottom of window and door penetrations. Sill flashing is used at the top of windows and doors. Outside and inside corner flashings are also common.

Typical installation sequence: Fasten C-flashing at the top of the wall and the drip flashing at the bottom of the wall. Slide the panel into the C-flashing until it clears the drip flashing and push the panel against the wall until flat, making sure the panel is straight and vertical, pull the panel down until it meets with the drip flashing, leaving 1/16" to 1/8" gap between panel and drip flashing. Fasten the panel through the wide flange and into the sheathing.

The next panel is installed by placing the top of the panel into the C-flashing and sliding the short leg of the panel into the groove on the previous panel and pushing the panel against the last panel installed until there is little or no gap. Adjust the panel up or down to align with previous panel and fasten the panel into place. Repeat the process on subsequent panels. Check for plumbness every few panels to keep straight.

Wall C-Flashing

SmoothWall™/ ShadowLine™ C-Flashing Application

- The C-flashings are applied to the wall, attached every 24" to 48" with a waferhead screw. Apply C-flashing at the top of the wall or when starting and finishing panel runs if no corners are used. For longer runs, it is usually better to apply 10' of flashing on each end at a time, that way you don't have to slide panels a great distance.
- Slide the wall panels into the channel created by the C-flashing. The short leg of the panel should be pointed into the C-flashing at the start of the run. Be sure to fasten the panel to the structure at least every 24" through the wide flange of the panel.
- Successive panels are installed the same way, but are installed so they attach to the previous panel. Push the panels together so there is little or no gab between them.

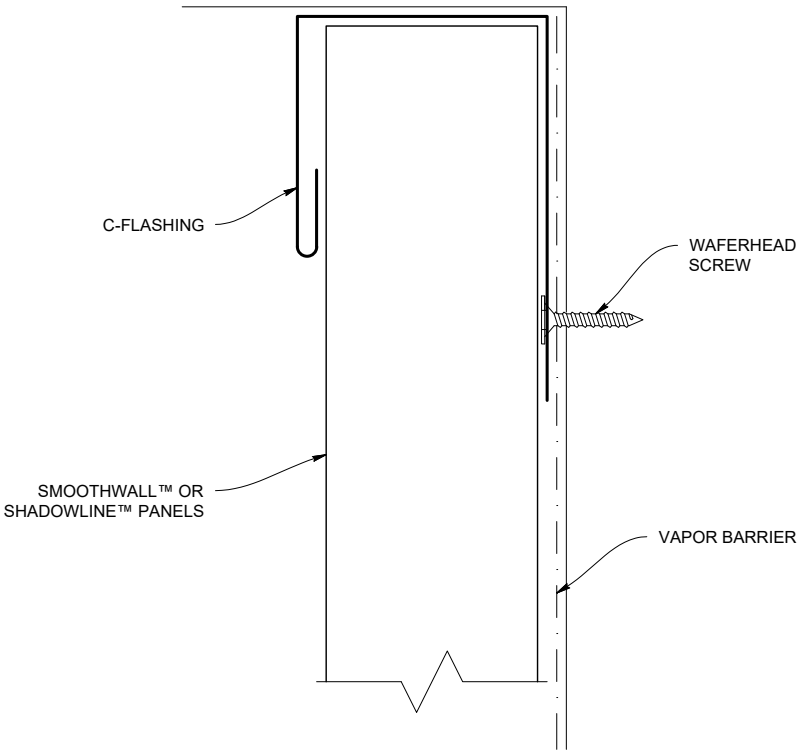

PART SHOWN: C-FLASHING (SW100CF / SH100CF)

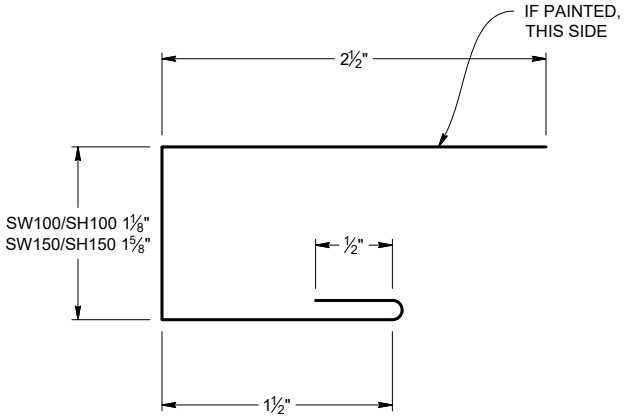

Base Flashing

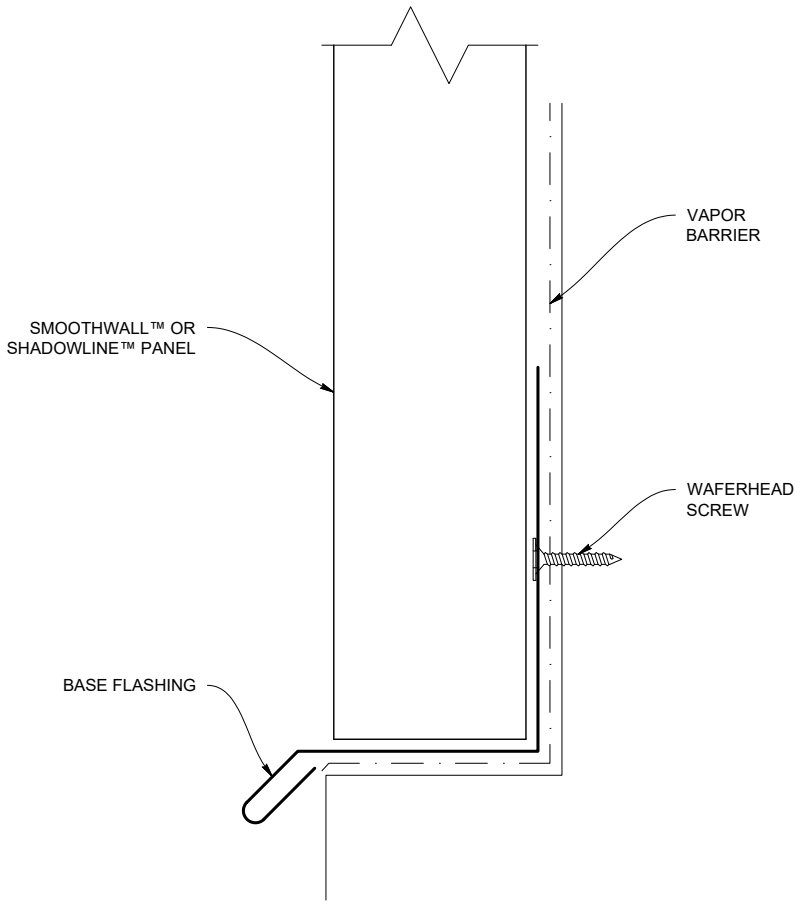

SmoothWall™/ ShadowLine™ Base Flashing Application

- Place the base flashing over the ledge/sill at the bottom of the wall.
- Fasten the base flashing to the wall with a waferhead screw through the upright 2" leg every 24" to 48"
- Install the first panel so the bottom is 1/16" to 1/8" from the base of the flashing.
- Subsequent panels are to be installed the same as the first, so that they are even and uniform.

PART SHOWN: BASE FLASHING (SW100BF / SH100BF)

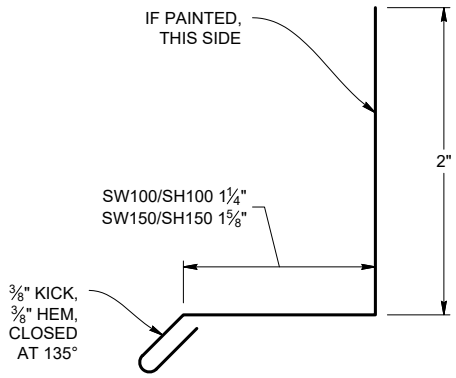

Outside Corner Flashing

TYPE A

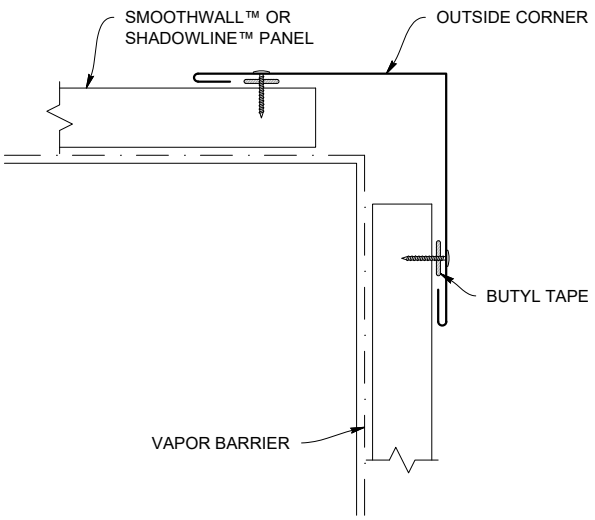

TYPE B

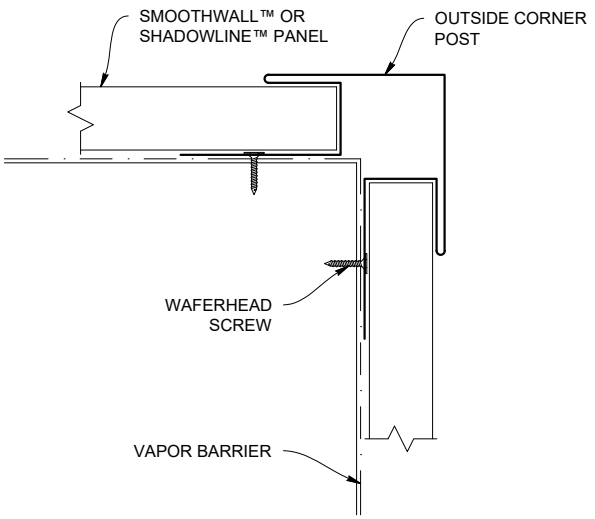

SmoothWall™/ ShadowLine™ Outside Corner Flashing Application

Type A:

- Install the panels on the wall, running the panels to the corner. Trim as necessary.
- Run a strip of butyl tape or caulking on the inside of the flashing, 1" in from each outside edge of the corner flashing.
- Attach the outside corner flashing to the panels with a rivet or a woodfast screw every 24" on both sides of the corner flashing, placing the fastener through the butyl tape.

Type B:

- Install the outside corner flashing to the corner of the structure, using a waferhead type screw every 24". Fit the edges of the panels into the channel of the corner flashing.
- Revit the panels into place as needed.

PART SHOWN: TYPE A - SW100COA / SH100COA

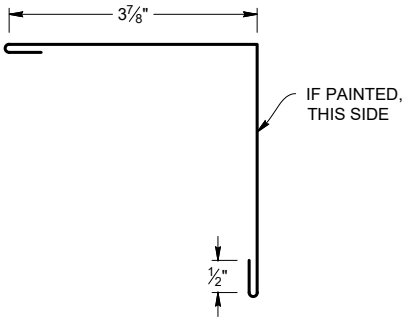

PART SHOWN: TYPE B - SW100COB / SH100COB

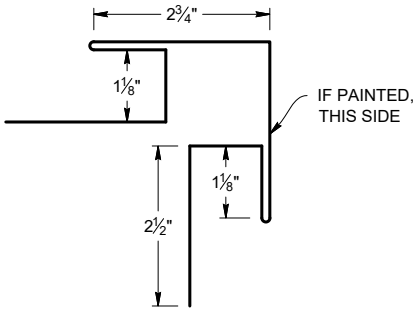

TYPE B - SW150COB / SH150COB

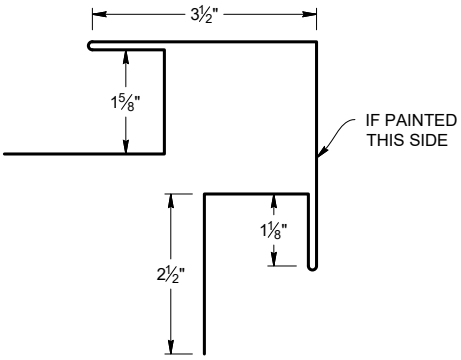

Inside Corner Flashing

TYPE A

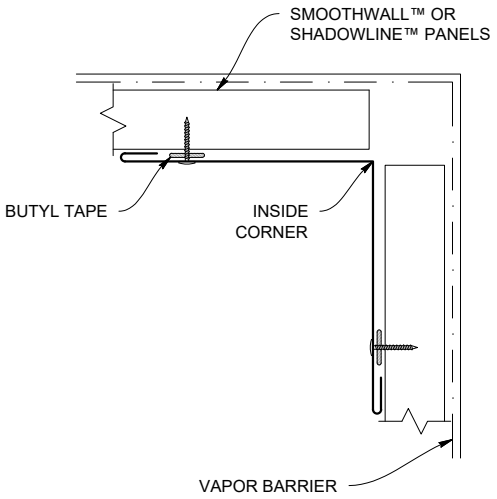

TYPE B

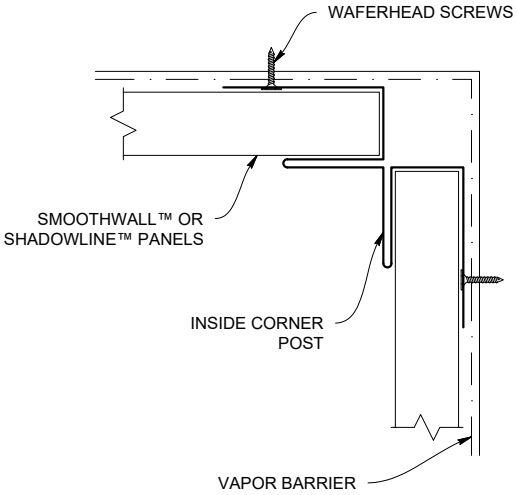

SmoothWall™/ ShadowLine™ Inside Corner Flashing Application

Type A:

- Install the panels on the wall, running the panels to the corner. Trim as necessary.
- Run a strip of butyl tape or caulking on the inside of the flashing, 1" in from each outside edge of the corner flashing.
- Attach the outside corner flashing to the panels with a rivet or a woodfast screw every 24" on both sides of the corner flashing, placing the fastener through the butyl tape.

Type B:

- Install the inside corner flashing to the corner of the structure, using a waferhead type screw every 24". Fit the edges of the panels into the channel of the corner flashing.
- Revit the panels into place as needed.

PART SHOWN: TYPE A - SW100CIA / SH100CIA

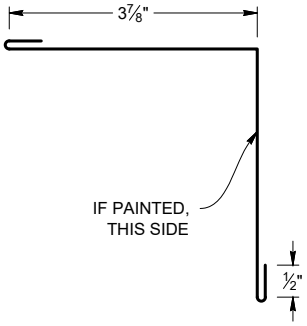

PART SHOWN: TYPE B - SW100CIB / SH100CIB

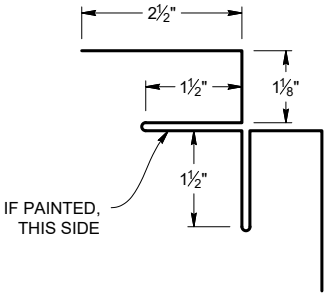

TYPE B - SW150CIB / SH150CIB

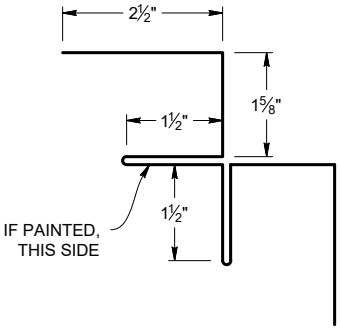

Z-Flashing

SmoothWall™/ ShadowLine™ Z-Flashing Application

- Install the Z-flashing by fastening it to the structure through the 2" leg with a waferhead screw every 24" to 48".
- Install the Z-flashing straight and square, perpendicular to panels and fasten into position.
- Install panels with C-Flashing and drip/sill flashing as previously stated.

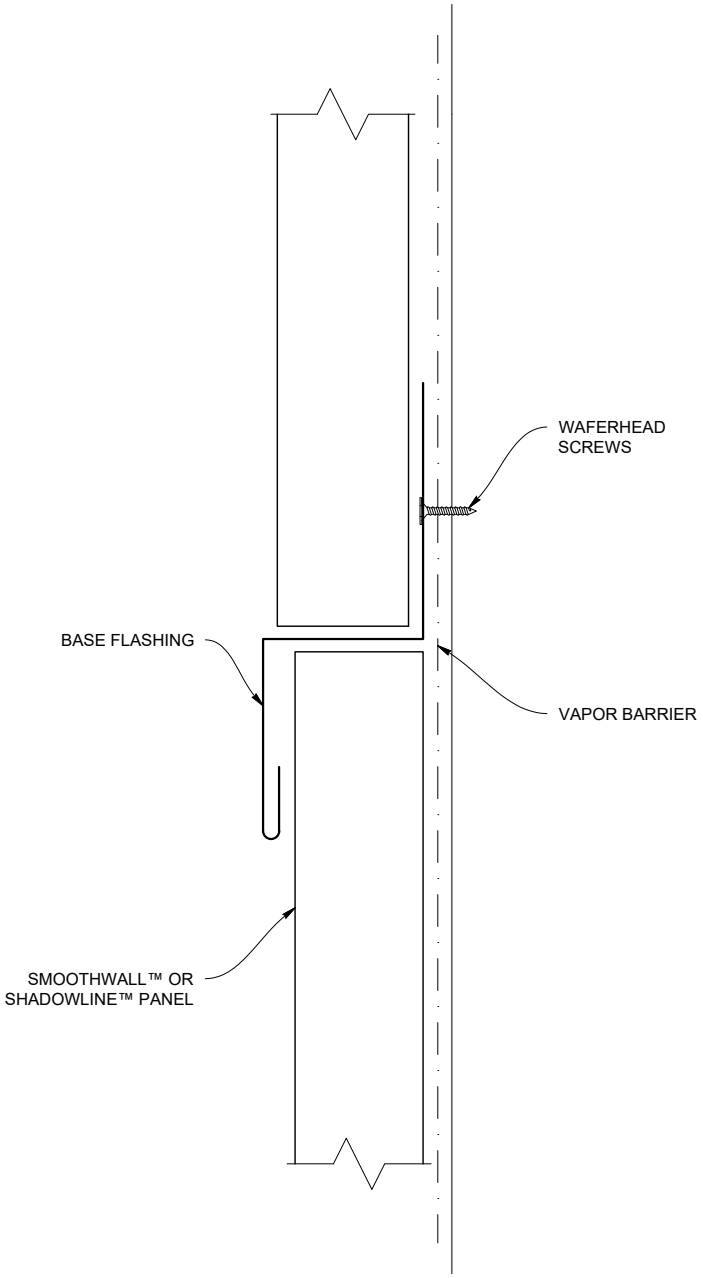

PART SHOWN: Z-FLASHING (SW100ZF / SH100ZF)

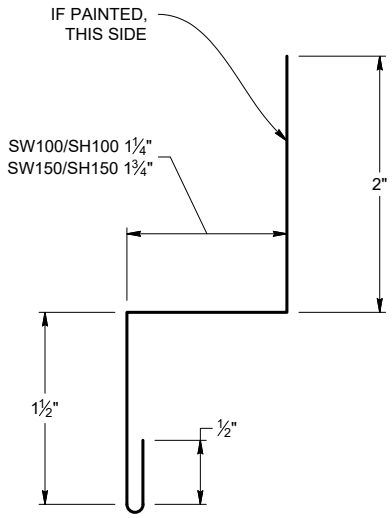

SmoothWall™/ ShadowLine™ Z-Backer Application

- Installation of Z-backer during panel installation creates a minor "pillowing" effect on the panel designed to mitigate Visual Canning Effects.
- Install flashing by pinning the top and bottom of Z-backer to surface before placing panel above.

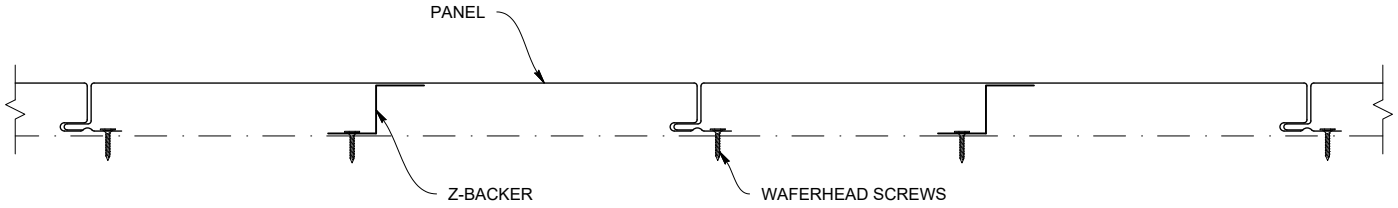

PART SHOWN: Z-BACKER (SW100ZB / SH100ZB)

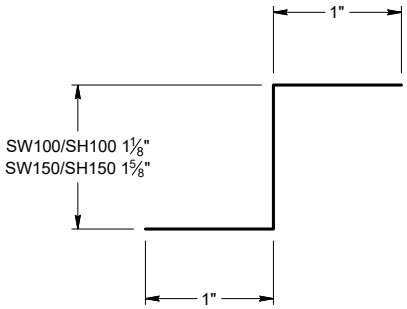

Soffit Panel Installation

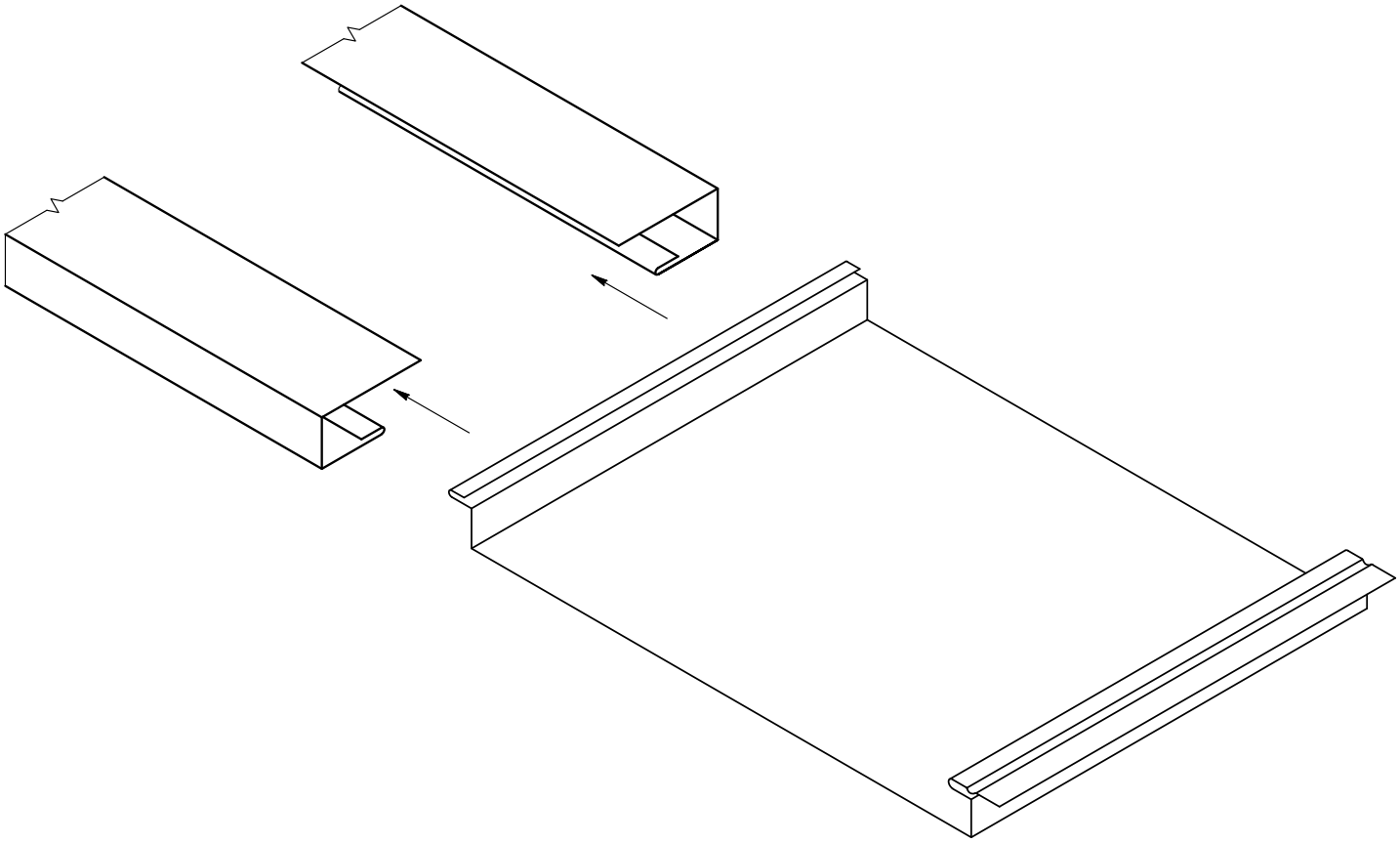

Lifetime Soffit™ Panel Installation

On a typical soffit installation, C-flashings are used on each side of the soffit (usually the building wall and the inside of the fascia board).

The panel is then inserted into the C-flashing from the end. Slide the panel to the end. The panel is fastened through the fastening flange of the panel to the structure, if the span exceeds 48". Fasten the panel to the C-flashing with a rivet on both fascia and wall sides.

Insert the next panel into the C-flashing and slide to meet the preceding panel. Fasten and repeat the process until the area is complete.

Soffit C & Angle Flashings

Lifetime Soffit™ C-Flashing Application

- The C-flashings are applied to the inside of the fascia board and directly across on the opposite wall, level with one another, and attached every 24" to 36" with a waferhead screw. Apply C-flashing on both sides and at each ends. For longer runs, it is usually better to apply 10' of flashing on each end at a time, that way you don't have to slide panels a great distance.
- Slide the soffit panels into the channel created by the C-flashing. The short leg of the panel should be pointed into the C-flashing at the start of the run. Be sure to fasten the panel to the structure if the span is greater than 48".
- Successive panels are installed the same way, but are installed so they attach to the previous panel. Push the panels together so there is little or no gab between them.
- Fasten each panel to the C-flashing with a rivet on both the fascia and wall sides as needed.
- C-flashing can be bent to allow the panels to be installed parallel with the roof line. The bend is limited to a 6/12 pitch or less. Specify pitch.

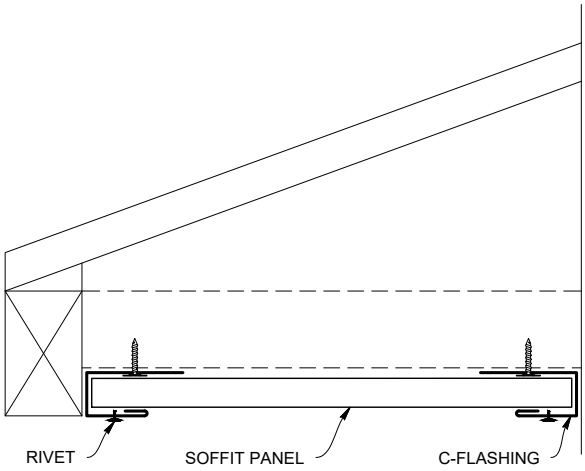

PART SHOWN: C-FLASHING (SF100CF)

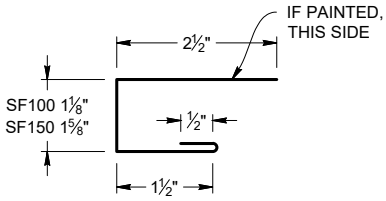

Lifetime Soffit™ Angle Flashing Application

- The Angle-flashing are applied both to the inside of the fascia board and directly across the opposite wall. The Angle-flashings are attached every 24" with a waferhead screw. Apply Angle-flashing on both the inside of the fascia board and the wall, as well as the end of the run.
- Lay each end of the panel(s) onto the ledge created by the 1-1/2" hemmed leg and fasten into place. Panels should be attached on each end to the Angle-flashing, on both the fascia and wall side. Be sure to support the panel if the span is greater than 48".

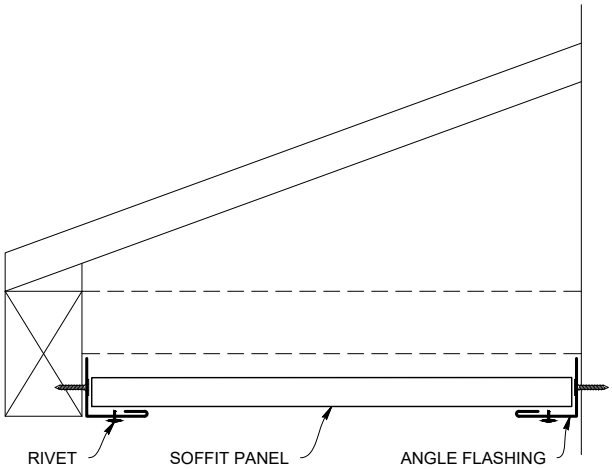

PART SHOWN: ANGLE FLASHING (SF100FA)

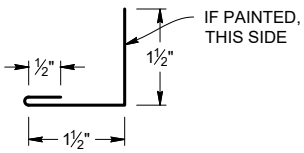

Lifetime Soffit™ Fascia Board Flashing Application

- This is a variation of the support flashings for the soffit panels. The Fascia Board flashing is used in conjunction with a fascia/wall panel, such as the SmoothWall™ Panel, and incorporates a ledge/leg to support the soffit panel.
- Installation of the soffit panels is the same as previously described.

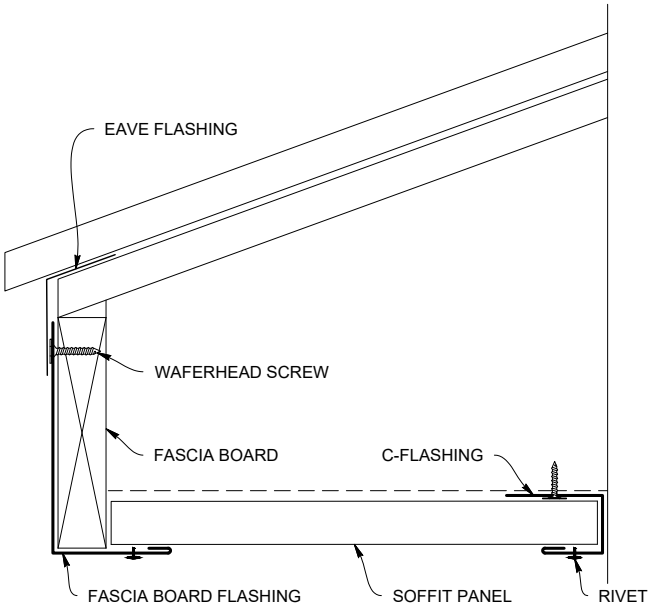

PART SHOWN: FASCIA BOARD (SF100FB)

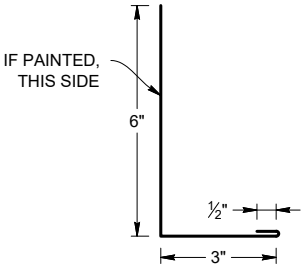

PART SHOWN: C-FLASHING (SF100CF)

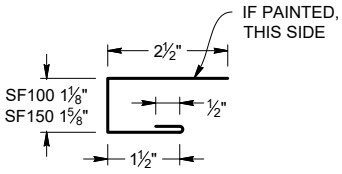

Lifetime Soffit™ H-Flashing Application

- Install the H-flashing by fastening the flashing to the structure through each of the long legs (2-1/2") with a waferhead screw.
- When installing panels at corners, cut the panels for the angle, usually 45 degrees, de-burr, clean and insert angled end into each side of the H-flashing.
- For long runs, install H-flashing straight and square perpendicular to panels and fasten into position. Install panels into channels at each end. Remember to fasten panel every 48" on single spans greater than 48".

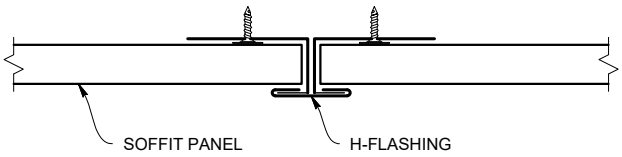

PART SHOWN: H-FLASHING (SF100HF)

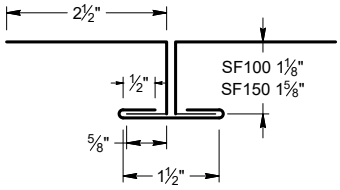

Lifetime Soffit™ Drip Flashing Application

- This is a variation of the support flashings for the soffit panels. The Soffit Drip flashing is used in conjunction with a fascia/wall panel, such as the SmoothWall™ Panel, and incorporates a drip lip as well as the ledge/leg to support the soffit panel.
- Installation of the soffit panels is the same as previously described.

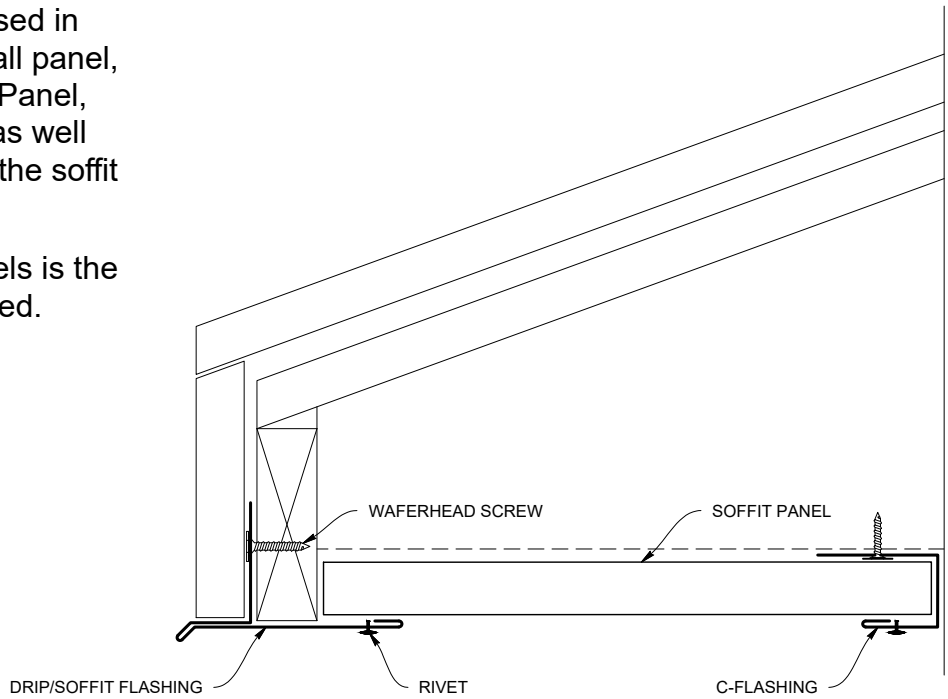

PART SHOWN: DRIP FLASHING (SF100DF)

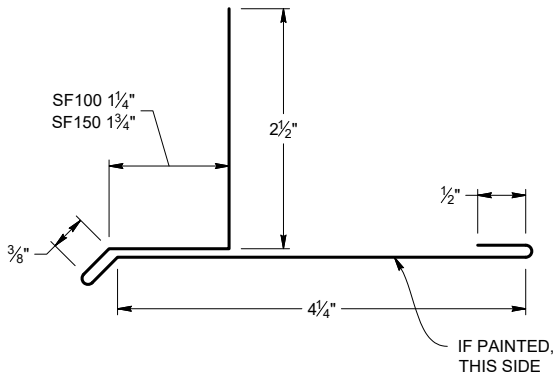

PART SHOWN: C-FLASHING (SF100CF)

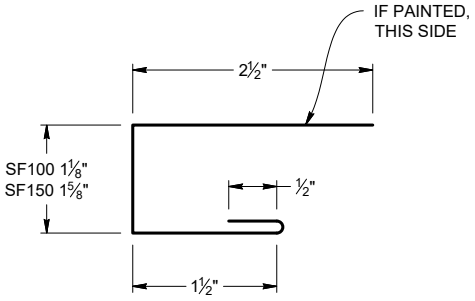

SMOOTHWALL C-FLASHING
SW100CF
SW150CF

WEIGHT: 4.78 LBS.
S.O. SW100 - 5.625"
SW150 - 6.125"

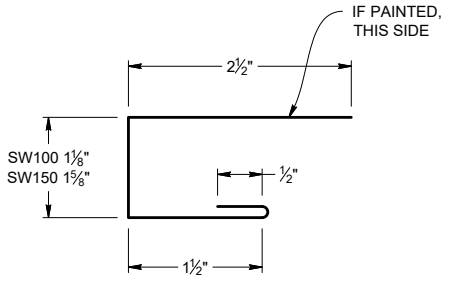

PITCH:_____

SCALE: 1:2

PART LEN: 10'

SMOOTHWALL OUTSIDE CORNER TYPE A
SW100COA
SW150COA

WEIGHT: 7.32 LBS.
S.O. 8.75"

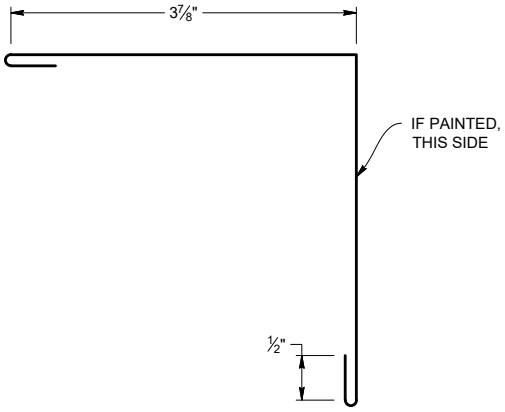

PITCH:_____

SCALE: 1:2

PART LEN: 10'

SMOOTHWALL 1" ALT OUTSIDE CORNER TYPE B
SW100COB

WEIGHT: 12.40 LBS.
S.O. 15"

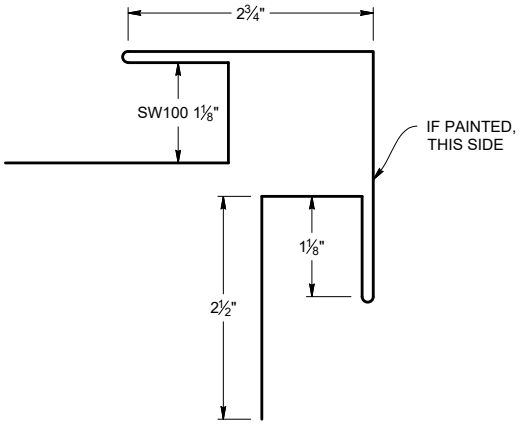

PITCH:_____

SCALE: 1:2

PART LEN: 10'

SMOOTHWALL 1-1/2" ALT OUTSIDE CORNER POST TYPE B
SW150COB

WEIGHT: 14.50 LBS.
S.O. 17.5"

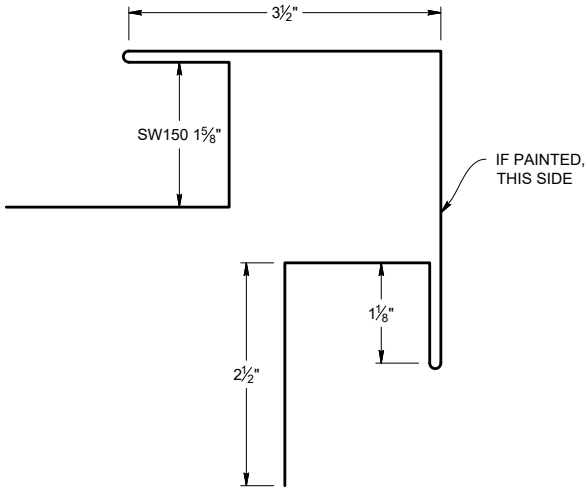

PITCH:_____

SCALE: 1:2

PART LEN: 10'

SMOOTHWALL INSIDE CORNER TYPE A — WEIGHT: 7.32 LBS.
SW100CIA — S.O. 8.75"
SW150CIA

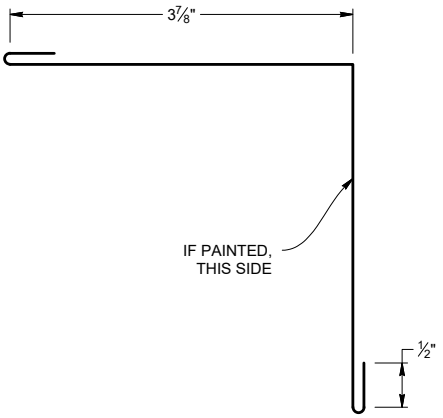

PITCH:_____
SCALE: 1:2 — PART LEN: 10'

SMOOTHWALL ALT INSIDE CORNER POST TYPE B — WEIGHT: 10.98 LBS.
SW100CIB — S.O. SW100 - 13.25"
SW150CIB — SW150 - 14.25"

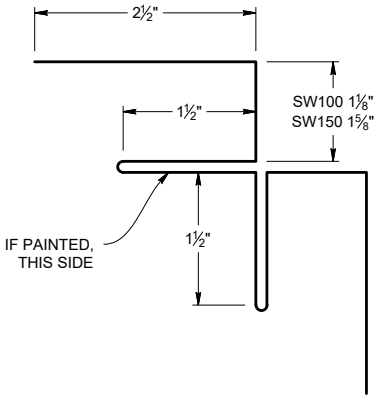

PITCH:_____
SCALE: 1:2 — PART LEN: 10'

SMOOTHWALL BASE FLASHING — WEIGHT: 3.45 LBS.
SW100BF — S.O. SW100 - 4"
SW150BF — SW150 - 4.5"

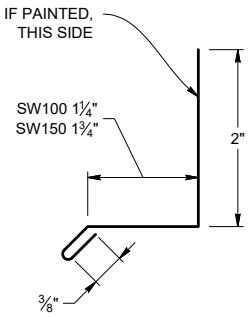

PITCH:_____
SCALE: 1:2 — PART LEN: 10'

SMOOTHWALL Z-FLASHING — WEIGHT: 4.47 LBS.
SW100ZF — S.O. SW100 - 5.25"
SW150ZF — SW150 - 5.75"

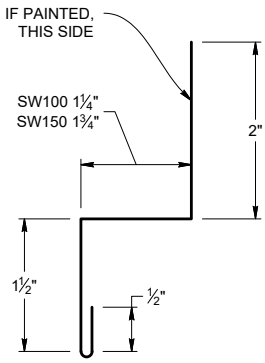

PITCH:_____
SCALE: 1:2 — PART LEN: 10'

SMOOTHWALL Z-BACKER
SW100ZB
SW150ZB

WEIGHT: 2.62 LBS.
S.O. SW100 - 3.125"
SW150 - 3.625"

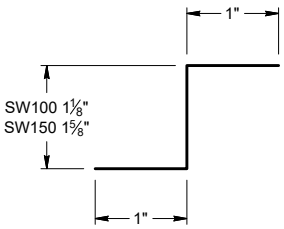

PITCH:_____

SCALE: 1:2

SHADOWLINE C-FLASHING
SH100CF
SH150CF

WEIGHT: 4.78 LBS.
S.O. SH100 - 5.625"
SH150 - 6.125"

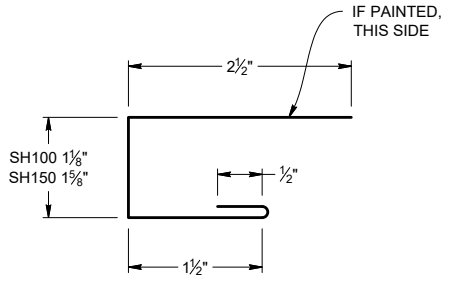

PITCH:_____
SCALE: 1:2
PART LEN: 10'

SHADOWLINE OUTSIDE CORNER TYPE A
SH100COA
SH150COA

WEIGHT: 7.32 LBS.
S.O. 8.75"

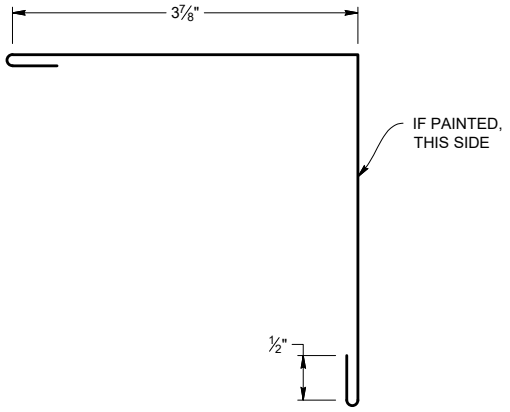

PITCH:_____
SCALE: 1:2
PART LEN: 10'

SHADOWLINE 1" ALT OUTSIDE CORNER TYPE B
SH100COB

WEIGHT: 12.40 LBS.
S.O. 15"

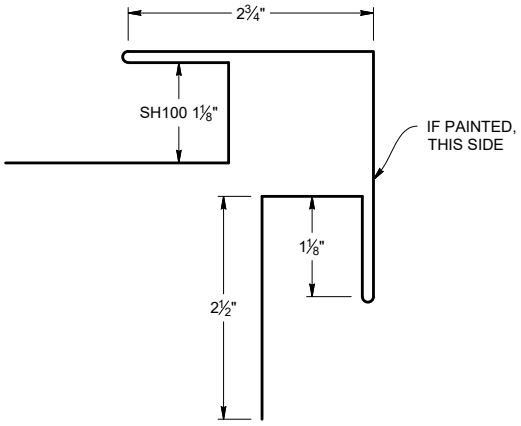

PITCH:_____
SCALE: 1:2
PART LEN: 10'

SHADOWLINE 1-1/2" ALT OUTSIDE CORNER POST TYPE B
SH150COB

WEIGHT: 14.50 LBS.
S.O. 17.5"

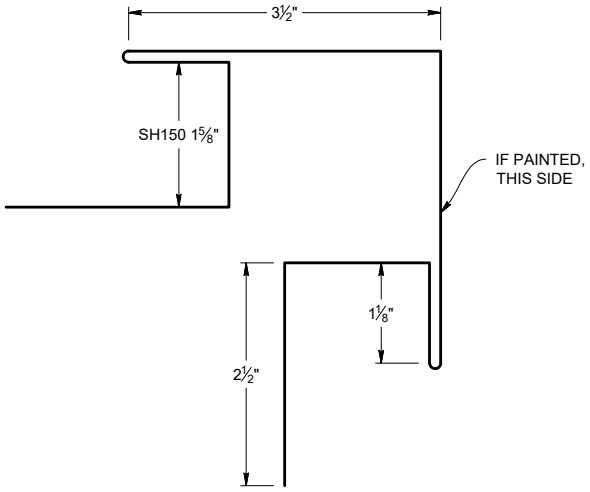

PITCH:_____
SCALE: 1:2
PART LEN: 10'

SHADOWLINE INSIDE CORNER TYPE A — WEIGHT: 7.32 LBS.
SH100CIA — S.O. 8.75"
SH150CIA

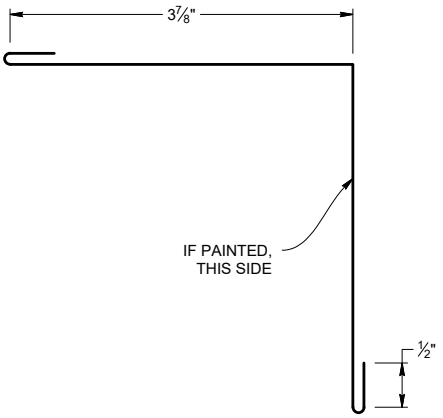

PITCH:_____
SCALE: 1:2 — PART LEN: 10'

SHADOWLINE ALT INSIDE CORNER POST TYPE B — WEIGHT: 10.98 LBS.
SH100CIB — S.O. SH100 - 13.25"
SH150CIB — SH150 - 14.25"

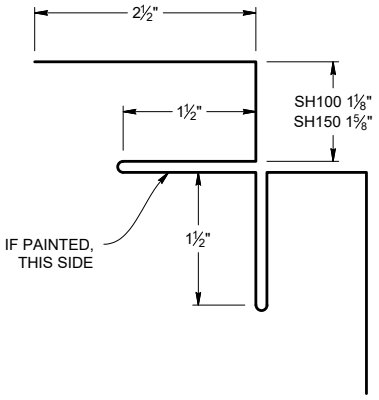

PITCH:_____
SCALE: 1:2 — PART LEN: 10'

SHADOWLINE BASE FLASHING — WEIGHT: 3.45 LBS.
SH100BF — S.O. SH100 - 4"
SH150BF — SH150 - 4.5"

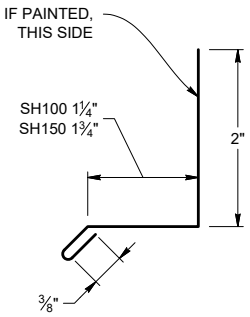

PITCH:_____
SCALE: 1:2 — PART LEN: 10'

SHADOWLINE Z-FLASHING — WEIGHT: 4.47 LBS.
SH100ZF — S.O. SH100 - 5.25"
SH150ZF — SH150 - 5.75"

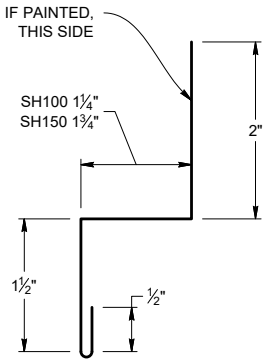

PITCH:_____
SCALE: 1:2 — PART LEN: 10'

SHADOWLINE Z-BACKER
SH100ZB
SH150ZB

WEIGHT: 2.62 LBS.
S.O. SH100 - 3.125"
SH150 - 3.625"

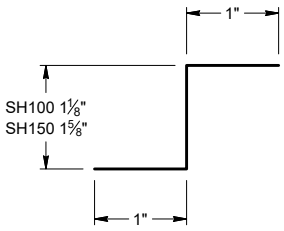

PITCH:_____

SCALE: 1:2

SOFFIT C-FLASHING — WEIGHT: 3.2 LBS.
SF100CF — S.O. SF100 - 5.625"
SF150CF — SF150 - 6.125"

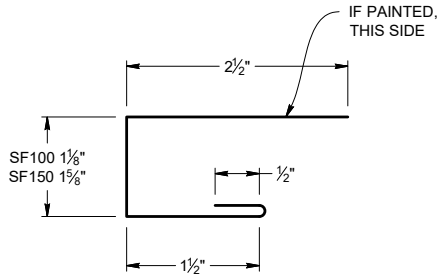

PITCH:_____
SCALE: 1:2 — PART LEN: 10'

SOFFIT ANGLE FLASHING — WEIGHT: 1.7 LBS.
SF100FA — S.O. 3.5"
SF150FA

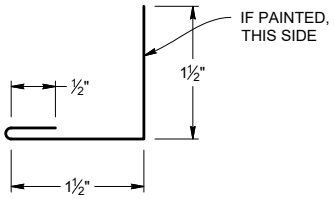

PITCH:_____
SCALE: 1:2 — PART LEN: 10'

SOFFIT DRIP FLASHING — WEIGHT: 4.5 LBS.
SF100DF — S.O. SF100 - 9.25"
SF150DF — SF150 - 9.75"

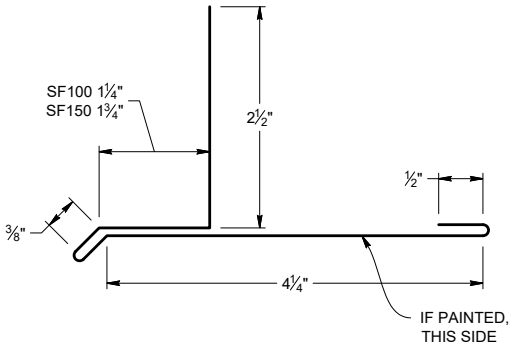

PITCH:_____
SCALE: 1:2 — PART LEN: 10'

SOFFIT FASCIA BOARD — WEIGHT: 4.6 LBS.
SF100FB — S.O. 9.5"
SF150FB

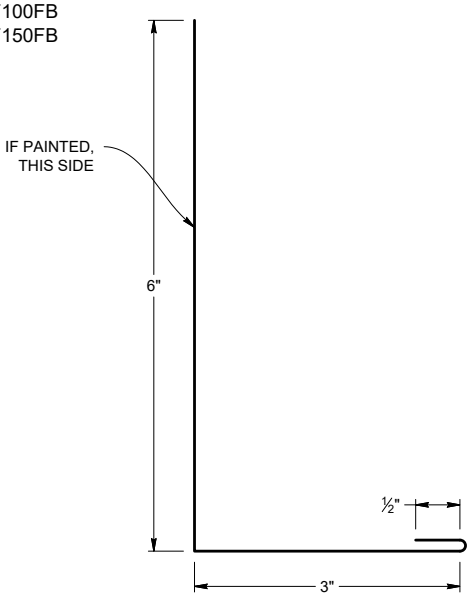

PITCH:_____
SCALE: 1:2 — PART LEN: 10'

SOFFIT H-FLASHING
SF100HF
SF150HF

WEIGHT: 5.3 LBS.
S.O. SF100 - 2x4.25" & 2.5"
SF150 - 2x4.75" & 2.5"

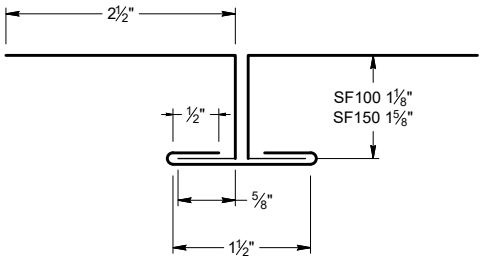

PITCH:_____

SCALE: 1:2

PART LEN: 10'

TAYLOR METAL PRODUCTS

Order Form

Inside Sale: _____

☐ New Order ☐ Add-on Order ☐ Quote

PO #: _____ Date: _____

Sold To: _____

_____

Order Contact: _____

Phone #: _____

Fax #: _____

Job Name: _____

Ship To: _____

_____

☐ Will Call ☐ Delivery

Day: _____ Delivery Date: _____

☐ Agricultural ☐ Residential ☐ Commerical Route: _____

Standard Panels are in Bold font.

- ☐ **PBR**
- ☐ **Marion "R" Panel**
- ☐ **Max Corr**
- ☐ **2-1/2" Corrugated**
- ☐ **Classic 7/8" Corrugated**
- ☐ **GR-7**
- ☐ **HR-34**
- ☐ **T-3**
- ☐ **Tuff-Rib**

Panels with * need Pattern Choice:

☐ Ribs ☐ Striations ☐ Flat (Flat not available on StreamLine)

Notched? Y / N Clip Relief? Y / N Sealant? Y / N

Notched AND Tabbed? Y / N (REQUIRED together for EasyLock & StreamLine)

Screw Concealer? Y / N (Standard for Ribs and Striations)

- ☐ **12" Easy-Lock***
- ☐ **16" Easy-Lock***
- ☐ **16" StreamLine***
- ☐ ShadowLine** (circle): 1", or 1-1/2"
  1/2" to 3" Reveal: _____
- ☐ **1"x12" SmoothWall****
- ☐ **1"x12" Lifetime Soffit****

Panels with ** need Pattern Choice:

☐ Striations ☐ Flat ☐ 1 V-Groove ☐ 2 V-Grooves

Perforated? (Available on Lifetime Soffit Only)

- ☐ **15 5/8" Slim-Lock***
- ☐ 12" MS-200*
- ☐ **14" MS-200***
- ☐ 16" MS-200*
- ☐ **18" MS-200***
- ☐ **12" MS-150***
- ☐ **16" MS-150***
- ☐ **20" MS-150***
- ☐ **13" MS-100***
- ☐ **17" MS-100***
- ☐ Other Panel: _____

Color: _____

Pitch: _____

Gauge: _____

Dmatch: _____

Pallet: 10' 20' 30'

- ☐ 12" Versa-Span*
- ☐ **14" Versa-Span***
- ☐ 16" Versa-Span*
- ☐ **18" Versa-Span***
- ☐ **14 5/8" T-Panel***

Panel & Flashing Items

*All Kynar Slim-Lock, Easy-Lock, Lifetime Soffit, SmoothWall, ShadowLine, T-Panel, Versa-Span, MS-100, MS-150, & MS-200 flashings are 10'

*All ArmorTech StreamLine, T-3, Tuff Rib, GR7, PBR, HR-32, Marion "R", & Corrugated flashings are 12'6"

Quantity	Length	Item Description	Part #	Quantity	Length	Item Description	Part #

Forgetting Anything? Underlayment? Screws? Clips? Caulking? Closures?

4566 Ridge Dr NE • Salem, OR 97301 • F: 503-581-6877 • P: 503-581-8338 • www.taylormetal.com

Custom Trim Order

TAYLOR METAL PRODUCTS

Customer Name: _____ Job Name: _____

Gauge: _____ Color: _____ Status: ☐ Original ☐ New

Specify: ☐ Angles ☐ Color Side ☐ Dimensions ☐ Stretchout

SO_____

Dwg #:_____ Pitch:_____ # of Pieces:_____

Description: _____

Hems: ☐ Open ☐ Closed ☐ Slightly Open

SO_____

Dwg #:_____ Pitch:_____ # of Pieces:_____

Description: _____

Hems: ☐ Open ☐ Closed ☐ Slightly Open

SO_____

Dwg #:_____ Pitch:_____ # of Pieces:_____

Description: _____

Hems: ☐ Open ☐ Closed ☐ Slightly Open

SO_____

Dwg #:_____ Pitch:_____ # of Pieces:_____

Description: _____

Hems: ☐ Open ☐ Closed ☐ Slightly Open

TAYLOR
METAL PRODUCTS

QUALITY PRODUCTS
EXCEPTIONAL SERVICE

SALEM BRANCH
4566 Ridge Dr. NE
Salem, OR 97301

Office: 503-581-8338
Toll Free: 1-800-574-1388
Fax: 503-581-6877

SACRAMENTO BRANCH
3443 Airport Rd,
Sacramento, CA 95834

Office: 916-318-8844
Toll Free: 1-800-574-1388
Fax: 916-993-4123

SPOKANE BRANCH
1010 N Nelson St.,
Spokane, WA 99202
www.go-rsp.com

Office: 509-535-8667
Toll Free: 800-238-4057
Fax: 509-535-8682

AUBURN BRANCH
2601 C St. SW,
Auburn, WA 98001

Office: 206-900-9923
Toll Free: 1-800-574-1388
Fax: 253-804-3545

RIVERSIDE BRANCH
4880 Felspar St.
Riverside, CA 92509

Office: 323-407-7457
Toll Free: 1-877-504-1594